Routine Inspection
Colorado Department of Transportation
Structure Inspection and Inventory Report (English Units)

Highway Number (ON) 5D: 00000 U
Mile Post (ON) 11: 0.257 mi
Linear Ref. Sys. MP: 0.257 mi

Bridge Key: CRESTONE-1A | Inspection Date: 01/10/2022 | Suff Rating: 17.9 SD | G/F/P Condition: Poor

NBI Reporting ID:	CRESTONE-1A	Main Mat/Desgn 43A/B:	3 03
District (Region/Sect):	Reg 5 MSec 7	Appr Mat/Desgn 44A/B:	0 0
Tran Region 2T:	8	Main Spans Unit 45:	1
County Code 3:	109	Approach Spans 46:	0
109 SAGUACHE		Horiz Clr 47:	16.70 ft
Place Code 4:	18420	Max Span 48:	20.6 ft
CRESTONE		Str Length 49:	40.0 ft
Rte.(On/Under) 5A:	1	Curb Wdth L/R 50A/B:	0.0 ft 0.0 ft
Signing Prefix 5B:	5	Width Curb to Curb 51:	16.70 ft
Level of Service 5C:	1	Width Out to Out 52:	17.3 ft
Direction Suffix 5E:	0	Deck Area:	692
Feature Intersected 6:		Min Clr Ovr Brdg 53:	99.99
NORTH CRESTONE CREEK		Min Undrclr Ref 54A:	N
Facility Carried 7:		Min Underclr 54B:	0.0 ft
COTTONWOOD ST		Min Lat Clrnce Ref R 55A:	N
Alias Str No.8A:		Min Lat Undrclr R 55B:	0.0 ft
		Min Lat Undrclr L 56:	0.0 ft
Prll Str No. 8P:		Deck 58:	3
N/A		Super 59:	6
Location 9:		Sub 60:	6
IN TOWN OF CRESTONE		Channel/Protection 61:	6
Max Clr 10:	99.99	Culvert 62:	N
BaseHiway Net12:	0	Oprtng Rtg Method 63:	1 LF Load Factc
IrsinvRout 13A:	109-0-2013	Operating Rating 64:	4.30
IrssubRout No13B:	00	Operating Factor 64:	-
Latitude 16:	37d 59' 45.21"	Inv Rtng Method 65:	1 LF Load Factc
Longitude 17:	105d 42' 0.95"	Inventory Rating 66:	2.50
Detour Length 19:	1 mi	Inventory Factor 66:	-
Toll Facility 20:	3	Asph/Fill Thick 66T:	6.0 in
Custodian 21:	03	Str. Evaluation 67:	2
Owner 22:	03	Deck Geometry 68:	2
Functional Class 26:	09	Undrclr Vert/Hor 69:	N
Year Built 27:	1991	Posting 70:	0 >39.9% below
Lanes On 28A:	2	Waterway Adequacy 71:	5
Lanes Under 28B:	0	Approach Alignment 72:	7
ADT 29:	142	Type Of Work 75A:	31
Year of ADT 30:	2018	Work Done By 75B:	1
Design Load 31:	0 Unknown	Length of Improvment 76:	62
Apr Rdwy Width 32:	21.00 ft	Insp Team Indicator 90B:	STANTEC
Median 33:	0	Inspector Name 90C:	ZLATKINA
Skew 34:	10 °	Frequency 91:	12 months
Structure Flared 35:	0	FC Frequency 92A:	
Sfty Rail 36a/b/c/d:	0 0 0 0	UW Frequency 92B:	
Rail ht36h:	26.0 in	SI Frequency (Pin) 92C:	
Hist Signif 37:	5	FC Inspection Date 93A:	
Posting status 41:	P	UW Inspection Date 93B:	
Service on/un 42A/B:	1 5	SI Date (Pin) 93C:	

Bridge Cost 94:	1,119,456.00
Roadway Cost 95:	111,946.00
Total Cost 96:	1,231,402.00
Year of Cost Estimate 97:	2020
Brdr Brdg Code/% 98A/B:	-1 0.00
Border Bridge Number 99:	
Defense Highway 100:	0
Parallel Structure 101:	N
Direction of Traffic 102:	2
Temporary Structure 103:	_
Highway Systems 104:	0
Fed Lands Hiway 105:	0
Year Reconstructed 106:	
Deck Type 107:	6
Wearing Surface 108A:	6
Membrane 108B:	0
Deck Protection 108C:	0
Truck ADT 109:	0.00 %
Trk Net 110:	0
Pier Protection 111:	!
NBIS Length 112:	Y
Scour Critical 113:	5
Scour Watch 113M:	N
Future ADT 114:	223
Year of Future ADT 115:	2038
CDOT Str Type 120A:	SDG
CDOT Constr Type 120B:	00
Expansion Dev/Type 124:	O
Brdg Rail Type/Mod 125A/B:	XX 0
Posting Trucks 129A/B/C:	3.0 4.8 4.8
Str Rating Date 130:	05/25/2021
Special Equip 133:	0.00
Vert Clr N/E 134A/B/C:	X 99.99 0.00
Vert Clr S/W 135A/B/C:	X 99.99 0.00
Vertical Clr Date:	12/31/1900
Weight Limit Color 139:	N, Not Checked
Userkey 1, Insp System:	OFFSYS
Userkey 4, Insp Sched:	ODD JAN S_0
Userkey 5, UW Sched:	
Userkey 6, Pin Sched:	
FHWA Bridge Risk:	HIGH
FHWA UW Risk:	NA
FHWA Load Rating Risk:	HIGH
CBTE:	NA
Inspection Key:	ABPV
Date Entered:	1/31/2022 12:37
Entered By:	CLARKJ

Inspection Type:	Regular NBI
EOR:	Stantec

Data Responsibility: Asset Management | Inspection | Rating

Element Inspection Report

Elm/Env	Description	Unit	Total Qty	% in 1	Qty. St. 1	% in 2	Qty. St. 2	% in 3	Qty. St. 3	% in 4	Qty. St. 4
30/1	**Steel Deck - Orthotropic**	**sq.ft**	636	0%	0	0%	0	100%	636	0%	0
		Painted corrugated metal decking on top of tongue and groove timber decking. Metal decking does not extend to the edge of bridge, 8 inches narrow on each side, which leaves the edges of the deck only supported by timber. Decking loose at south end. R2 rust where exposed at holes in timber deck. Assume R2 rust throughout although most is not visible.									
510/1	Wearing Surfaces	sq.ft	692	97%	668	0%	0	3%	24	0%	0
		4 inches asphalt on 2 inches gravel above tops of corrugations. (2) transverse cracks up to 0.125 inch wide. (2) potholes in west edge of deck up to 2 inch long x 6 inch wide x 6 inch deep due to failed timber deck.									
3210/1	*Del/Spall/Patch/Pot*	*sq.ft*	*4*	*25%*	*1*	*0%*	*0*	*75%*	*3*	*0%*	*0*
		See Element 510 comments.									
3220/1	*Crack (Wearing Su*	*sq.ft*	*20*	*0%*	*0*	*0%*	*0*	*100%*	*20*	*0%*	*0*
		See Element 510 comments.									
515/1	Steel Protective Coatin	sq.ft	636	0%	0	0%	0	0%	0	100%	636
		Painted. Failed at rust locations.									
1000/1	Corrosion	sq.ft	636	0%	0	0%	0	100%	636	0%	0
		See Element 30 comments.									
31/1	**Timber Deck**	**sq.ft**	692	0%	0	0%	0	89%	617	11%	75
		Tongue and groove timber decking covered by painted corrugated metal decking. Timber deck has widespread severe rot. Timber decking at the edges of bridge has several areas of localized failures. The Condition State 4 defect has been reviewed by the Stantec Program Engineer and does have an effect on the strength and/or serviceability of the element or bridge. An Essential Repair Letter has been sent to the bridge owner to address the issue on 1/14/2022.									
1140/1	Decay/Section Loss	sq.ft	692	0%	0	0%	0	89%	617	11%	75
		See Element 31 comments.									
107/1	**Steel Opn Girder/Beam**	**ft**	80	0%	0	88%	70	13%	10	0%	0
		(2) steel channel and hat section beams from two salvaged railroad car frames, bolted together. R1 rust throughout with areas of R2 rust, typical scrape at bottom under side. Car frames bear behind stone abutments (not visible) and on timber caps on stone abutments.									
515/1	Steel Protective Coatin	sq.ft	80	0%	0	0%	0	0%	0	100%	80
		Painted. Failed at rust locations.									
1000/1	Corrosion	ft	80	0%	0	88%	70	13%	10	0%	0
		See Element 107 comments.									
113/1	**Steel Stringer**	**ft**	320	0%	0	97%	310	3%	10	0%	0
		Steel Z sections. R1 rust throughout with a few locations of R2 to R3 rust.									
515/1	Steel Protective Coatin	sq.ft	320	0%	0	0%	0	0%	0	100%	320
		Painted. Failed at rust locations.									
1000/1	Corrosion	ft	320	0%	0	97%	310	3%	10	0%	0
		See Element 113 comments.									
152/1	**Steel Floor Beam**	**ft**	138	0%	0	100%	138	0%	0	0%	0
		Steel beams of varying section, major beams cantilevered, alternated with simple spans. Light R1 rust throughout.									
515/1	Steel Protective Coatin	sq.ft	138	0%	0	0%	0	0%	0	100%	138
		Painted. Failed at rust locations.									
1000/1	Corrosion	ft	138	0%	0	100%	138	0%	0	0%	0
		See Element 152 comments.									

217/1	**Masonry Abutment**	**ft**	35	97%	34	3%	1	0%	0	0%	0

Stone masonry with timber caps. The rock walls with timber caps appear to act more like slope protection/or temporary bents as most girders do not bear on timber as load rating suggests but appear to extend all the way back to the ends of the bridge. Appears that the girders bear on dirt and that this element should be considered to be termed as Element 325 Slope protection with dirt berms. Cracking less than 10 percent of mortar joint in both abutments, 0.5 inch vertical crack at centerline in south abutment (A1).
2020: Cutoff walls installed prior to 2020 inspection at the southwest and northeast corners. All previous scour and loose stones have been mitigated by this repair.
Previous 2019 scour notes:
Up to 14 inches of undermining at northeast for 7 feet. Up to 12 inch of undermining at southwest due to missing stones approximately 10 feet long. Same condition at 11/30/2016 and 1/9/2019 inspections as 6/30/2015 inspection.

1610/1	Mortar Breakdown (Ma	ft	1	0%	0	100%	1	0%	0	0%	0

See Element 217 comments.

235/1	**Timber Pier Cap**	**ft**	35	0%	0	94%	33	0%	0	6%	2

Timber cap at each abutment. Severe rot in east end of north abutment (A2) for 2 feet, rot is at end and does not affect bearing area of load capacity. Staining and weathering.
The Condition State 4 defect has been reviewed by the Stantec Program Engineer and does not have an effect on the strength and/or serviceability of the element or bridge. The quantity was left in Condition State 4 as a flag to the next inspector to determine if the defect has deteriorated more and will require another review.

1140/1	Decay/Section Loss	ft	35	0%	0	94%	33	0%	0	6%	2

See Element 235 comments.

330/1	**Metal Bridge Railing**	**ft**	80	85%	68	13%	10	3%	2	0%	0

Galvanized W-beam rail with flared end sections on unpainted steel tube posts welded to edge plate. Both rails lapped in wrong direction at splices. Bolts missing from splices. R1 rust of posts. Southwest post leaning out approximately 6 inches. Dent in both rails on top at midspan. Minor collision damage to bridge rail end section at southeast and northwest. Impact was noted at 2011 inspection.

515/1	Steel Protective Coatin	sq.ft	80	100%	80	0%	0	0%	0	0%	0

Galvanized W-beam. No significant defects.

1000/1	Corrosion	ft	8	0%	0	100%	8	0%	0	0%	0

See Element 330 comments.

1020/1	Connection	ft	2	0%	0	0%	0	100%	2	0%	0

See Element 330 comments.

7000/1	Damage	ft	2	0%	0	100%	2	0%	0	0%	0

See Element 330 comments.

9325/1	**Slope Prot/Berms**	**(EA)**	1	100%	1	0%	0	0%	0	0%	0

Grouted riprap and concrete slope protection installed at the northwest corner.

9326/1	**Bridge Wingwalls**	**(EA)**	3	67%	2	0%	0	33%	1	0%	0

Stone masonry at southeast wingwall. None at northwest. Cutoff wall installed prior to the 2020 inspection extends to the northeast and acts as a wingwall. Timber southwest wingwall severely rotted.

9501/1	**Channel Cond**	**(EA)**	1	100%	1	0%	0	0%	0	0%	0

Channel consists of gravel and boulders. Good alignment. Stone masonry and large rock provides adequate protection. Steep, grassy banks with brush. Upstream banks are higher than deck.

9520/1	**AppRdAlign**	**(EA)**	1	100%	1	0%	0	0%	0	0%	0

Slight horizontal curve at south end, asphalt to south and for 30 feet north then gravel. Wide transverse crack in asphalt at south end of bridge.

9600/1	**Genl Remarks**	**(EA)**	1	100%	1	0%	0	0%	0	0%	0

Bridge required posting of 3 Tons per new load rating dated 5/25/2021 and is posted correctly at time of 2022 inspection. Signed Restricted Bridge at both approaches. 6 inch x 18 inch object markers bolted to flared ends of bridge rails. 2 inch diameter PVC utility conduit at east side of bridge. Structure shows moderate deflection under light loads.

Inspection References and Definitions:

Crack Width Descriptions for Reinforced Concrete:
Insignificant cracking (in.) = Less than 0.012 wide
Moderate cracking (in.) = 0.012 to 0.05 wide
Wide cracking (in.) = Greater than 0.05 wide

Rust Codes (R Codes):
R1 = Peeling of the paint, pitting, surface rust, etc., no measurable section loss.
R2 = Flaking, minor section loss (< 10% thickness loss).
R3 = Flaking, swelling, mod section loss (10% < thickness loss <30%).
R4 = Heavy section loss (> 30% thickness loss), may have holes through base metal.

Crack Width Descriptions for Prestressed Concrete:
Insignificant cracking (in.) = Less than 0.004 wide
Moderate cracking (in.) = 0.004 to 0.009 wide
Wide cracking (in.) = Greater than 0.009 wide

Concrete Scaling Codes (S Codes):
S1 = Light scale up to 1/4" deep.
S2 = Moderate scale up to 1/2" deep with agg. exposed.
S3 = Heavy scale up to 1" deep with some agg. loose or missing.
S4 = Critical scale > 1" deep with reinforcing bars exposed and general disintegration of the concrete.

Maintenance Activity Summary

MMS Activity	Description	Recommended	Status	Target Year	Priority
**353.30	Deck-Replace	1/14/2020	_	2022	Urgent

Extend metal deck to exterior girders. Consider removing the steel and timber deck and reinstalling the steel deck and extending it to the edges of the structure.

156.00	Approach Roadway	1/10/2022	_	2023	Low

Seal crack in asphalt at south end of bridge.

306.05	Approach Railing	6/29/2015	1	2022	High

Install transitions, approach rails, and rail ends to meet current AASHTO/CDOT standards.

306.09	Bridge Rail-Repair	6/29/2015	1	2024	Medium

Loosen bridge rail and lap in correct direction, both sides, drill out and install bolts at splices, if not replaced per 306.09 Bridge Rail - Upgrade.

306.09	Bridge Rail-Upgrade	6/29/2015	1	2022	High

Upgrade bridge rails to meet current AASHTO/CDOT standards.

353.08	Deck-Seal	1/14/2020	_	2023	Low

Seal cracks in asphalt on deck.

355.00	Paint-Structural	1/14/2020	_	2025	Medium

Paint steel members at rust locations, if not replaced per Activity 399.00.

358.01	Substructure-Rehab	1/14/2020	_	2024	Low

Replace north abutment (A2) cap that has severe rot in east end.

399.00	Bridge-Replacement	1/10/2022	_	2024	High

Consider replacing bridge due to severe deterioration and reduced load carrying capacity.

Bridge Notes (Inspection > Inventory > Admin)

1/5/2021: NBI Item 58 lowered from 5 to 3 for severe rot of timber deck planks with several local failures along edges of deck.

Inspection Notes (Inspection > Condition)

Date - 01/10/2022
Temp: 20 degrees Time: 10:00 AM Weather: Clear, breeze
ERL issued on 1/14/2022 for timber deck deterioration.

Scour Item 113 Documentation (Inspection > CDOT Bridge)

CRESTONE-1A SCOUR Item 113 Screening Memo 2022 03 10.pdf 2020-03 Item 113 changed to 5. See CRESTONE-1A SCOUR Item 113 Change Request Memo SIGNED 2020 03 10.pdf for more information.

Bat Present At Bridge (Inspection > Inventory > Agency Items > userkey9)

No

Inspection Access Requirements (Inspection > CDOT Bridge)

Scheduling Notes (Inspection > Schedule)

Routine Inspection
Colorado Department of Transportation
Structure Inspection and Inventory Report (English Units)

Highway Number (ON) 5D: 00000 U
Mile Post (ON) 11: 0.257 mi
Linear Ref. Sys. MP: 0.257 mi

Scope:

☑ NBI ☑ Element ☐ Underwater ☐ Fracture Critical ☐ Other Type: Regular NBI

Team Leader Inspection Check-off:

☐ FCM's
☐ Posting Signs
☐ Essential Repair Verification
☐ Vertical Clearance
☐ Stream Bed Profile

Inspection Team: STANTEC

Inspection Date: 01/10/2022

Inspector: Unknown

Zlatkin, Alex
Digitally signed by Zlatkin, Alex
Date: 2022.05.10 08:30:32 -06'00'

Inspector (Team Leader): ALEX ZLATKIN

Structure Number:	**CRESTONE-1A**	Owner:	**Town of Crestone**
Facility Carried:	**COTTONWOOD ST**	Inspection Date:	**1/10/2022**
Feature Intersected:	**NORTH CRESTONE CREEK**		

Load posting sign at south approach

Load posting sign at north approach

Structure Number:	**CRESTONE-1A**	Owner:	**Town of Crestone**
Facility Carried:	**COTTONWOOD ST**	Inspection Date:	**1/10/2022**
Feature Intersected:	**NORTH CRESTONE CREEK**		

Roadway looking north

Elevation looking west

Structure Number:	**CRESTONE-1A**	Owner:	**Town of Crestone**
Facility Carried:	**COTTONWOOD ST**	Inspection Date:	**1/10/2022**
Feature Intersected:	**NORTH CRESTONE CREEK**		

General looking north

Channel looking upstream

Structure Number:	**CRESTONE-1A**	Owner:	**Town of Crestone**
Facility Carried:	**COTTONWOOD ST**	Inspection Date:	**1/10/2022**
Feature Intersected:	**NORTH CRESTONE CREEK**		

Channel looking downstream

East bridge rail lapped in wrong direction with missing bolts

Transverse crack in asphalt on deck

Transverse crack in asphalt at south end of bridge

Pothole in asphalt at west edge of deck due to failed timber deck

Overview of severely rotted timber deck with local failures at west edge exposing metal deck

Close-up of timber deck failure at west edge of deck

R2 rust of west edge of corrugated metal deck

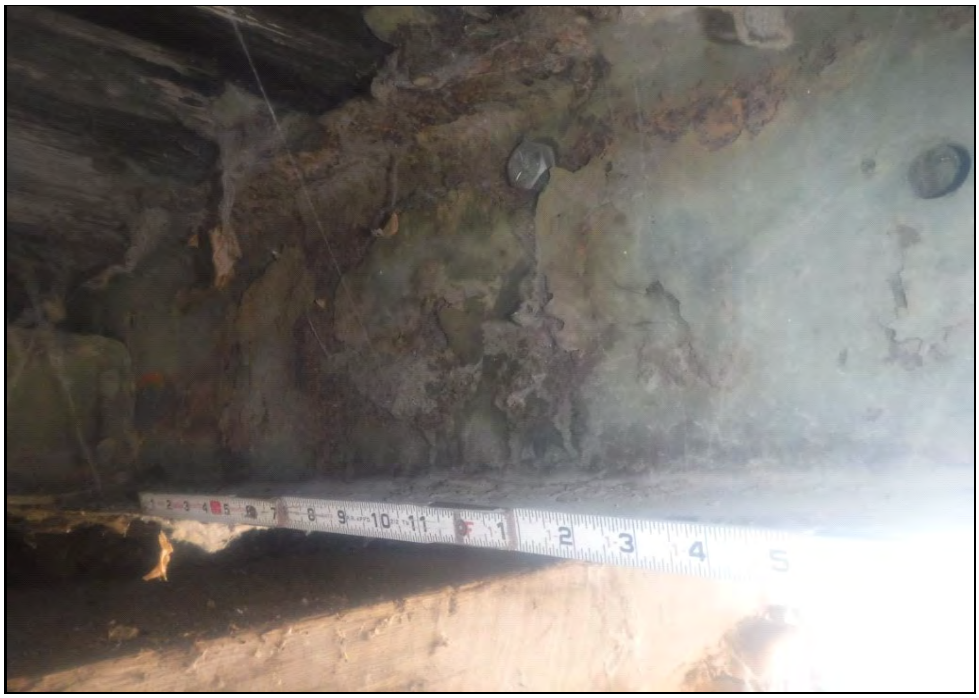

R2 rust of girders

R2 rust of bottom flange of stringer

Rot in east end of A2 timber cap

Vertical crack in mortar of A1

Structure Number:	**CRESTONE-1A**	Owner:	**Town of Crestone**
Facility Carried:	**COTTONWOOD ST**	Inspection Date:	**1/10/2022**
Feature Intersected:	**NORTH CRESTONE CREEK**		

Rot of southwest timber wingwall

CRESTONE-1A

WINGWALLS:

STONE MASONRY (LENGTH ON PLAN) W/ 3"x 12" TIMBER PLANK WING AT SOUTHWEST

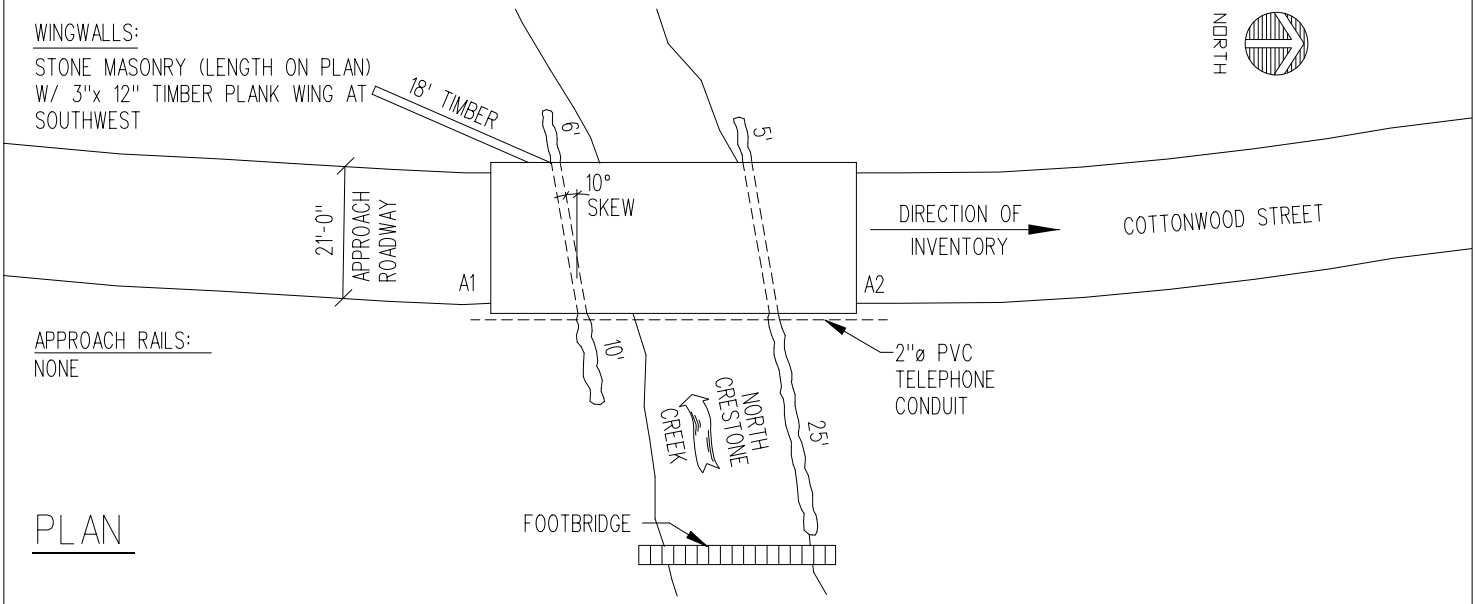

APPROACH RAILS:
NONE

PLAN

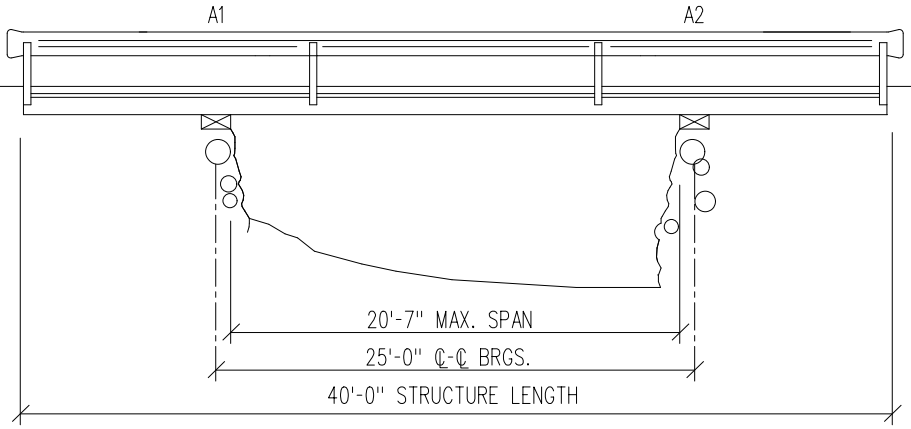

ABUTMENTS:
8" x 16" TIMBER SILL ON STONE MASONRY WALLS

ELEVATION

LOOKING WEST

BRIDGE RAILINGS:

GALV. W-BEAM RAIL W/ FLARED END SECTIONS ON 4"x 4" STEEL TUBE POSTS @ 12'-6" O.C. (4/SIDE)- WELDED TO EXTERIOR CHANNELS

DECK:

4" ASPH. ON 2" GRAVEL ON 2"x6"x12 GA. PAINTED CORR. METAL DECKING ON 2"x 10" TONGUE & GROOVE TIMBER DECK

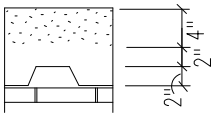

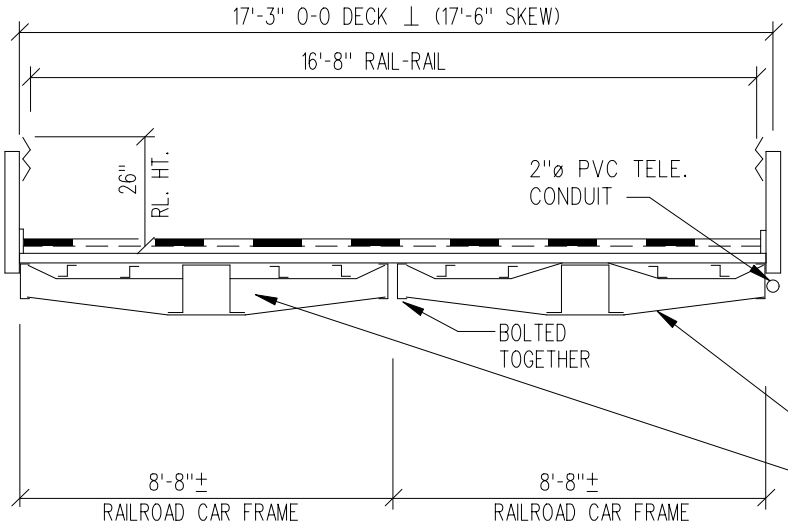

STRINGERS:
(4) [9 1/2"x 2 1/2"
(1/4" TOE, 3/16" WEB)
(8)

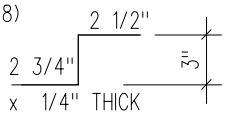

GIRDERS:
(2)

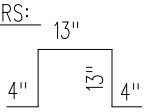

(5/8" "t")

FLOOR BEAMS:
(2) MAJOR - THUS @ 8'-3"
(5) INTERMEDIATE - THUS MIDWAY BTWN. MAJORS

SECTION

LOOKING NORTH

COLORADO DEPARTMENT OF TRANSPORTATION

LOAD FACTOR RATING SUMMARY

Structure #	CRESTONE-1A
State Highway #	COTTONWOOD ST
Batch I.D.	
Structure Type	SDG
Parallel Structure #	

Rated using:
Asphalt thickness: 4 in.
- [x] Colorado legal loads
- [ ] Interstate legal loads
- [ ] Multi-lane for Legal & Permit Vehicles
- [x] Single lane for Legal & Permit Vehicles

Structural Member	Main Girder	Stringer	Dbl Channel	Deck	
	Tons				
Inventory	2.5	18.7	23.8	61.6	
Operating	4.3	31.2	39.8	67.9	
Type 3 truck	3.0	37.6	29.1		
Type 3S2 truck	4.8	59.2	45.2		
Type 3-2 truck	4.8	59.1	45.8		
Type SU4 truck (27T)	3.0	44.2	28.7		
Type SU5 truck (31T)	3.2	50.8	30.4		
Type SU6 truck (35T)	3.3	60.0	31.6		
Type SU7 truck (39T)	3.7	67.0	35.0		
NRL (40T)	3.8	64.3	35.9		
EV2 (28.75T)	3.3	23.9	31.1		
EV3 (43T)	3.1	38.6	29.9		
Permit Truck (96T)					
Modified Tandem (50T)					

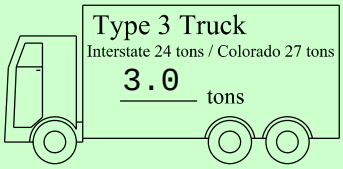

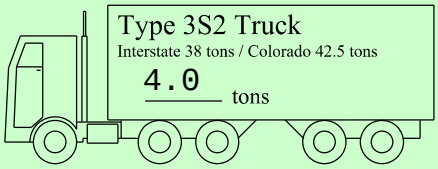

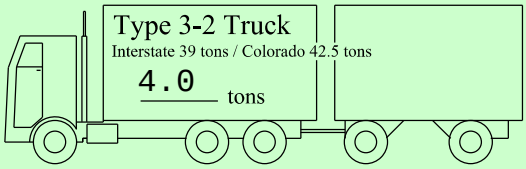

Comments:
Posting Required
SU4, SU5, SU6, SU7, NRL EV2 and EV3: 3T
-Bridge Details:
Single Span: 25'-0"; Skew: 10°00'00" Left; (2) Box Car Frames side-by-side
-Deck Details:
4" Asphalt over 2" Gravel above corrugations on 2"x6"x12GA corrugated metal decking; Fy=36ksi; on 2"x10" timber planking; timber planking not rated
-Steel Girder Details:
Main Girder: (2) HCZ 13x10 1/2 @ 8'-8" oc; Fy=33 ksi; modeled as plate girder in BrR
Stringer: Z3x2 3/4 @ 1' 3 3/4" spanning 6 cont. spans of 4'-2"; Fy=33ksi; modeled as plate girder in BrR
Channel: (2) C9x15 bolted together; Fy=33ksi

Critical Section: Flexure @ Mid-span

Rated w/: AASHTOWare BrR, V 6.8.3.3001 LFR Engine
Rated by HCL Engineering & Surveying LLC

PE Seal

Rated by: (Print name and sign)	Date:	Checked by: (Print name and sign)	Date:
Chad Buelter, EIT Chad Buelter	5/25/21	Jason Dahnke, PE Jason Dahnke	5/25/21

CDOT OFF-SYSTEM BRIDGE SCOUR SCREENING CHART FOR NEW INVENTORY

COLORADO
Department of Transportation
Office of the Chief Engineer

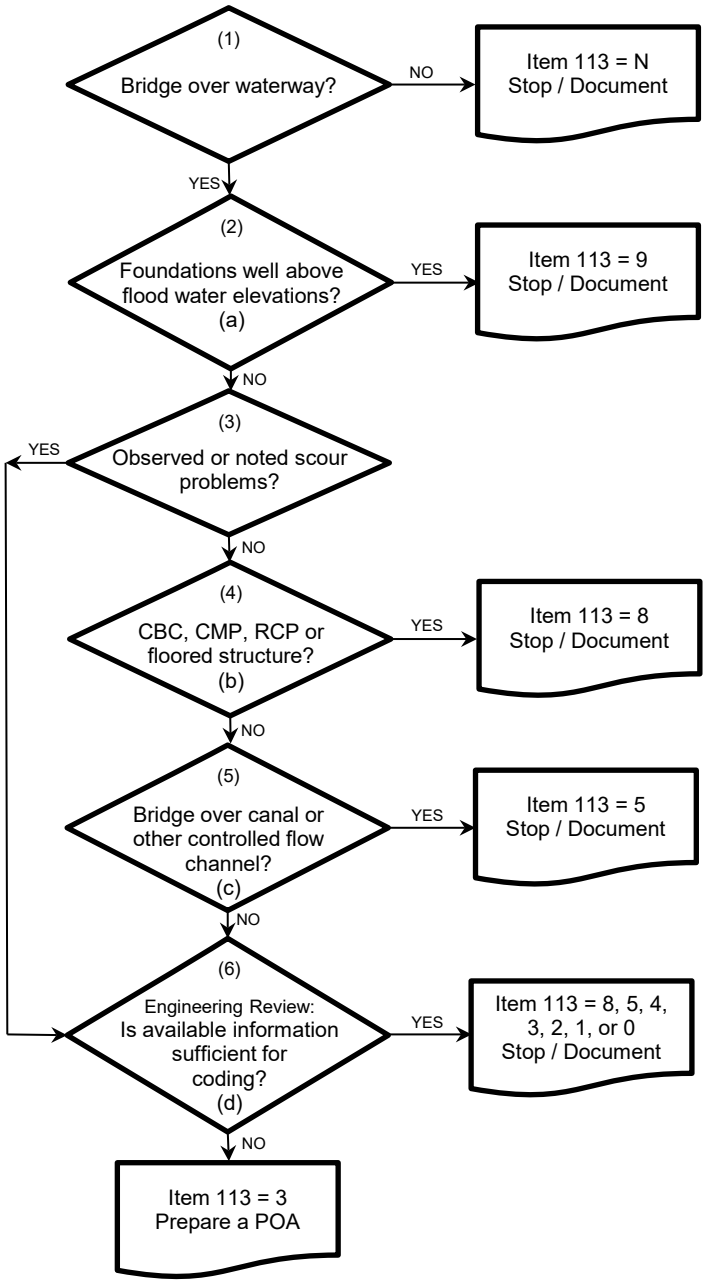

STRUCTURE ID:	CRESTONE-1A
FACILITY CARRIED:	Cottonwood Street
FEATURE INTERSECTED:	North Crestone Creek
STRUCTURE TYPE:	SDG
ITEM 113 =	5
POA REQUIRED (Y/N):	N
POA COMPLETION DATE:	N/A
EVALUATED BY:	Adam Leith
ORGANIZATION:	Stantec
DATE:	3/10/2022

REVIEWER COMMENTS:

One span bridge consisting of railroad car superstructure on stone masonry abutments. Constructed in 1991. No plans available. Gravel and boulder channel with good alignment.

Previous scour issues were repaired with concrete cutoff walls and grouted riprap prior to 2020. Item 113 change from 4 to 5 was approved by CDOT.

Basis for selected 113 code:
Item 113 = 5 since previous scour issues were repaired.

(a) Well above flood waters means that there is no way water would ever reach the foundations, e.g. the Red Cliff Arch (F-11-T).

(b) All pipe and box culverts (and other floored structures) are to be coded either 8 (stable) or 4 (repairs needed). After repairs are completed, the code should be changed back to 8.

Examples of scour problems that would merit a code of 4 include:

- Undermining of cutoff walls or aprons. Exposure of cutoff walls or wingwall footings without undermining is generally not sufficient to merit a code of 4. A Maintenance Recommendation should be made instead.
- Evidence of piping (flow is going through the embankment on the outside of the pipe). If not repaired, the structure or roadway may suddenly fail when enough of the surrounding fill is washed out.

Open bottom culverts should be analyzed and coded as bridges.

(c) Bridges that cross irrigation canals or other controlled waterways should be coded 5 unless other findings indicate that a lower code should be used. If the canal structure is a pipe or box culvert, follow the coding system for (b).

(d) Sufficient information for coding of 8 or 5 means that:

- Construction plans showing the foundations and the calculated scour depths are available. Scour information is typically shown on the Hydraulic Data sheets or drawn on the bridge profile drawing.

or

- Construction plans with geotechnical information are available that show the foundations are on scour resistant bedrock and (if on piles) not anticipated to fail from buckling if exposed.

or

- The foundations are unknown, but they are protected with riprap or other material of sufficient size and extent to withstand a major flow event (100 to 500-year).

Unknown, unprotected foundations are considered to be vulnerable to scour failure. The bridge should be coded 3.

canal structure is a pipe or box culvert, follow the coding system for (b).

to scour failure. The bridge should be coded 3.

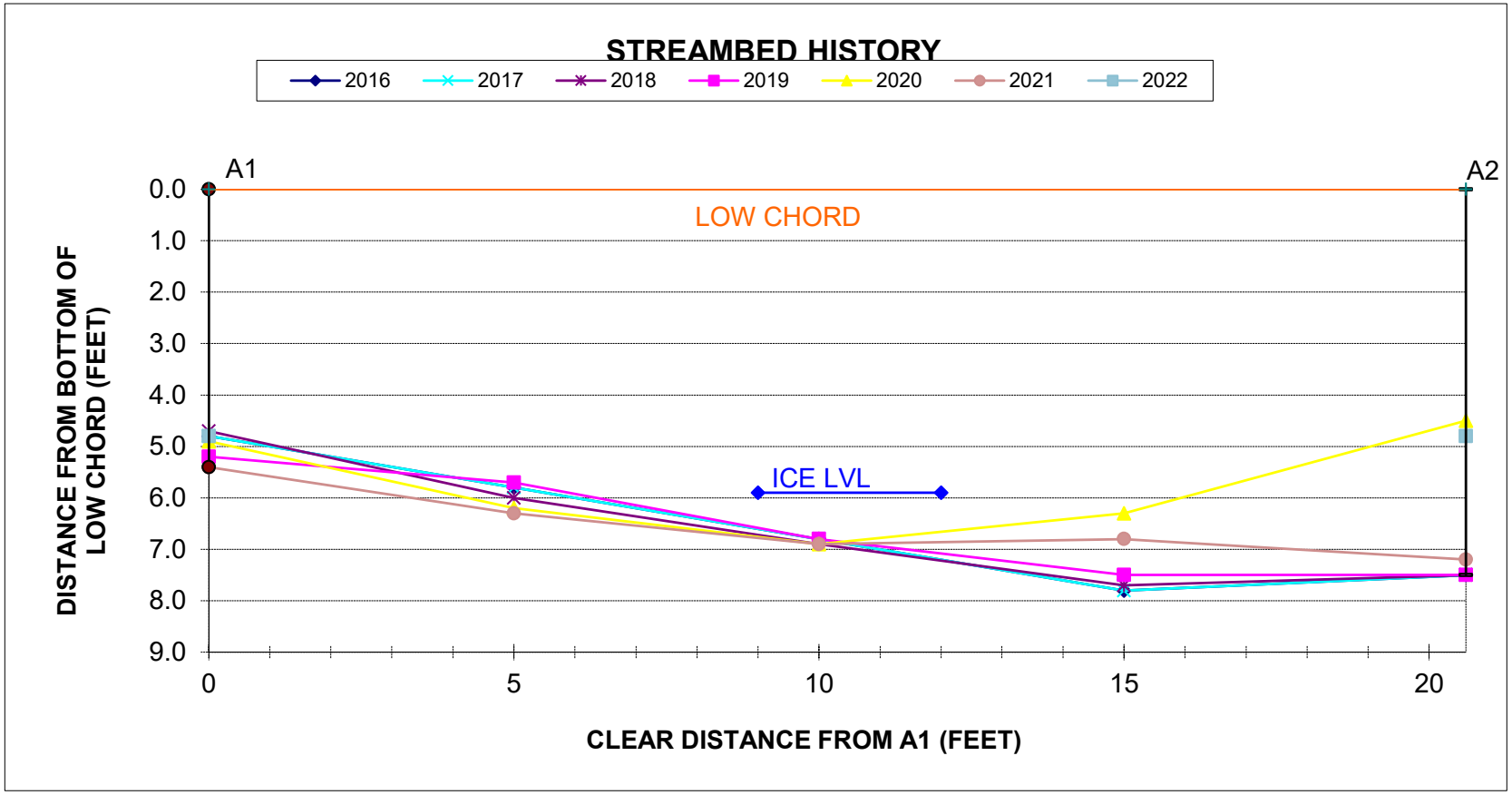

		0	5	10	15	20.6	WTR LVL
11/30/2016	2016	4.8	5.8	6.8	7.8	7.5	6.7
3/17/2017*	2017	4.8	5.8	6.8	7.8	7.5	6.7
1/24/2018	2018	4.7	6.0	6.9	7.7	7.5	6.8
	2019	5.2	5.7	6.8	7.5	7.5	DRY
	2020	4.9	6.2	6.9	6.3	4.5	6.8
	2021	5.4	6.3	6.9	6.8	7.2	6.3
	2022	4.8				4.8	5.9

* Site Visit - No Data Taken

STRUCTURE NUMBER: CRESTONE-1A

INSPECTION DATE: 1/10/2022

PERFORMED BY: JC

= Grey box indicates streambed measurement could not be taken due to ice

To:	Andrew Martinez Public Works Coordinator Town of Crestone	From:	Adam Leith Infrastructure Inspection Engineer Stantec
Date:	01/14/2022		

Essential Repair Finding – CRESTONE-1A

The following bridge is recommended for repairs as recently discovered by the bridge inspection program:

Responsible Party: Town of Crestone

Facility Carried: Cottonwood Street

Feature Intersected: North Crestone Creek

ERF Color Code Classification: Orange (See definition at end of letter)

Structure Description: CRESTONE-1A is a single span bridge constructed from 2 repurposed railroad cars side by side. The deck consists of a corrugated metal deck on top of timber planks, but the corrugated metal deck does not extend all the way to the edges of the deck (about 8 inches short on each side). Substructure consists of timber cap on masonry abutments.

Findings

Bridge is posted at 3 Tons. There is severe rot of the timber deck planks especially along the edges of the deck. There are several local failures of the timber deck planks at the deck edges which has exposed the asphalt wearing surface. These failures of the timber planks leave an approximately 6-inch-wide unsupported gap in the deck between the metal deck and the exterior steel girder. See the attached photos.

Recommendations

We recommend either extending the metal deck all the way to the exterior girders or replacing the entire deck.

The Essential Repair for this structure has been given an **Orange** Priority.

We recommend completing the repairs within 30 days.

Let us know your Plan of Action

CDOT would like to know your plan of action to repair or mitigate the above conditions. Please respond to this essential repair letter within 14 days with a very brief plan of action that includes what repairs are planned and a general timeframe for when you expect repairs will be made.

Please let me know if you have any questions or if I can provide any additional information regarding this inspection.

Thank you for your time,

Adam Leith, PE
Infrastructure Inspection Engineer
Phone: 720-244-7078
Adam.Leith@Stantec.com

Inspector Printed Name: Alex Zlatkin
Inspector Signature: _____
Date of Inspection: 1/10/2022

Senior Inspection Engineer Printed Name: Adam Leith
Senior Inspection Engineer Signature: _____
Date Reviewed: 01/14/2022

By signing here, I have determined that the above description of Essential Bridge Repairs meets the established criteria set forth by CDOT Staff Bridge and that the repair is essential. Color code prioritization has been determined and notification of the above findings has been sent to the local agencies' public works or road and bridge departments.

Definition, Classification and Prioritization

Definition of Essential Bridge Repairs: Repairs necessary to ensure the safe and continued service of off-system major bridge structures. Examples of essential repair needs include but are not limited to: tension members identified as fracture critical members within the Structure File Data and which are damaged by natural or impact forces, a condition which results in a restriction of the maximum acceptable load carrying capacity of a structure to some value less than 27 Tons on the Type III, 3-axle truck at the Operating Rating level, three adjacent crushed stringers, three broken stringers in one span, two of which are adjacent to one another, stringers with rot at the ends, which may cause the stringer to fall off the timber cap, “mushrooming” for a depth of 2 inches on three adjacent stringers, rot in the top of 80 percent of all stringers in one span, which reduces the effective depth by 25 percent, rot in timber piles that affect the carrying-capacity of the structure, concrete girders with over 30 percent of the primary moment steel severed, loss of section in beam ends and/or spalls in concrete girder supports where girders have less than 80 percent bearing area remaining, steel members with over 30 percent section loss, steel or aluminum culverts including super spans with unusual section displacement and/or gaps at the point of overlap and cracks in bolt lines, scour greater than one foot since the last inspection which has caused vertical or horizontal displacement, scour under a spread footing, which has caused a loss of 15 percent of the bearing area.

When identifying a needed repair as essential, the Bridge Inspection Program Manager will classify the repair based on the appropriate time frame for addressing the problem as follows:

Classification	Legacy Color Code	Target Time Frame for Completion	Priority	Federal NBIS	Initial Notification	E-Mail Notification Time Frame	Follow-up Time Frame
Urgent Priority Repair	Orange	Within 30 days	Urgent		E-Mail Notification	Within 10 working days of finding	14 Calendar days of E-Mail
High Priority Repair	Yellow	Within 90 days	High		E-Mail Notification	Within 10 working days of finding	14 Calendar days of E-Mail
Moderate Priority Repair	Green	Within one year	Moderate		At presentation	As needed (not required)	As needed or At next inspection
Monitor	Blue	Specified in the letter	Monitor		E-Mail Notification	Within 10 working days of finding	As suggested in the notification
Low Priority Repair (maintenance item)	No Color	As funding allows	Low		Included with transfer files to Owner	N/A	At next inspection

cc:
Lynn E. Croswell, P.E., CDOT Bridge & Structure Inspection Engineer
Natasha Butler, P.E., CDOT Bridge Asset Management Engineer
Josh Dunbar, CDOT Structure Inspections Project Manager
Andrew Brown, CDOT Bridge Inspections Project Manager
Spencer Tucker, P.E., FHWA Division Bridge Engineer

Photo 1 – Roadway looking north

Photo 2 – Elevation looking west

Photo 3 – Overview of severely rotted timber deck with local failures at edge of deck exposing metal deck

Photo 4 – Close-up of timber deck failure at edge of deck